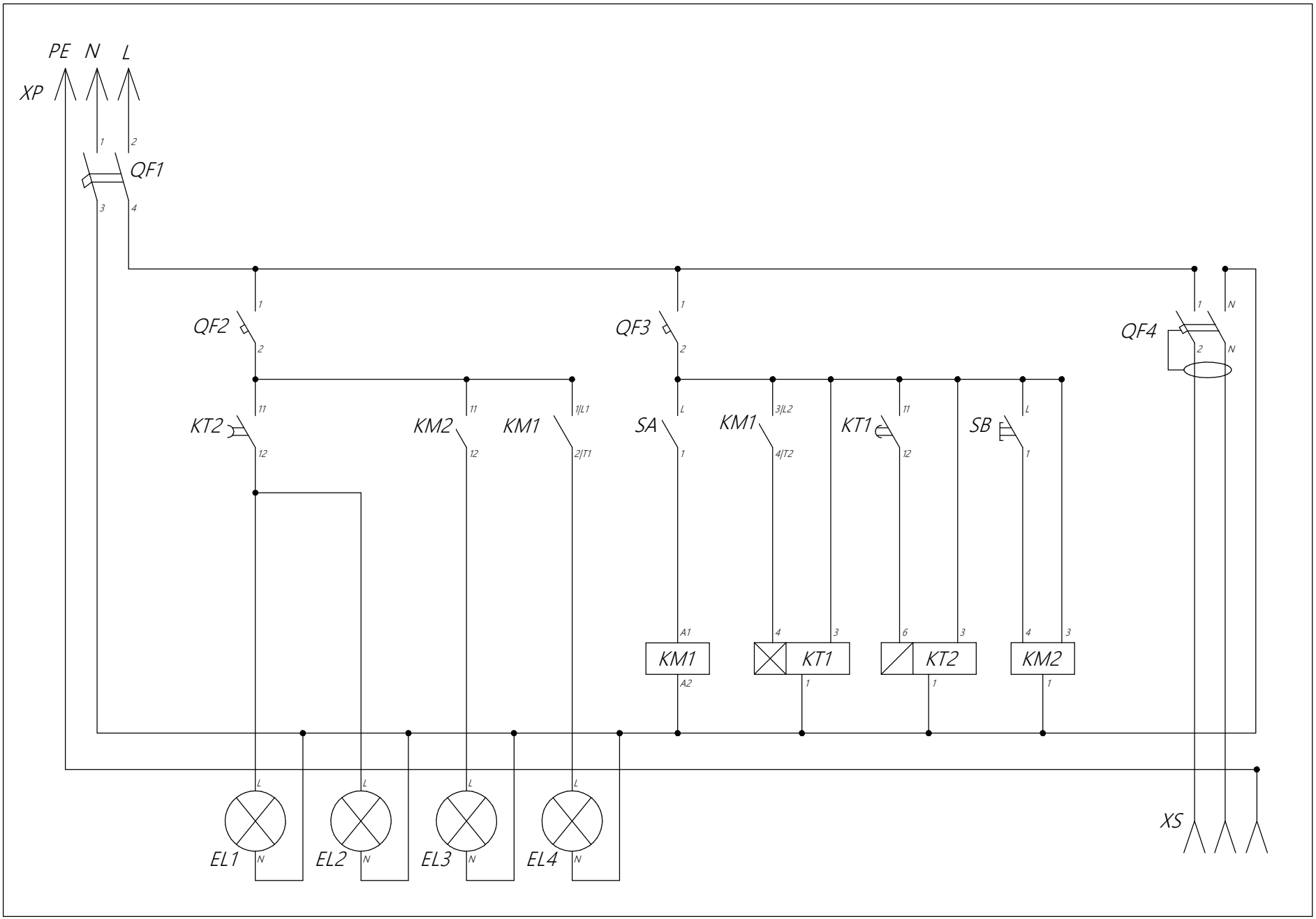
PE N L
XP
1 2
QF1
3 4
QF2
1
2
11
KT2
12
KM2
11
12
KM1
1|L1
2|T1
QF3
1
2
SA
L
1
KM1
3|L2
4|T2
KT1
11
12
SB
L
1
A1
KM1
A2
4 3
KT1
1
6 3
KT2
1
4 3
KM2
1
QF4
1 N
2 N
L
N
EL1
EL2
EL3
EL4
XS